Electrolux PROFESSIONAL

Plug In SpeeDelight with flexible plate, ribbed removable teflon plate_UK Plug

ITEM #

MODEL #

NAME #

SIS #

AIA #

603877 (HSG3RPRSE1)	SpeeDelight with Flexible Top ribbed Contact Plate, dark grey - UK

Short Form Specification

Item No.

Lid, top plate, back cover and side panels constructed in 304 AISI stainless steel and external high-grade composite material paneling and handle; bottom in AISI 430 stainless steel. Self-adjusting upper plate adapting to food thickness or blockable in fixed position to avoid contact with food. Possibility to manually adjust the maximum movement of the upper plate. Ribbed top contact plate (215x215mm) in aluminum with non-stick coating. Can accept snacks from 10 to 75mm thick. Smooth 4mm thick quartz glass bottom cooking surface (250x250mm). 2 probes independently control the temperature of the top and bottom plates (100 to 250°C). Automatic lid holding and lifting at the end of the cooking cycle via mechanical spring. Ergonomic handle in high-grade composite material for easy movement of the lid. Electronic control with digital 4,3" LED display with countdown and buzzer at the end of the cycle. 800W heating element on the top plate and 800W electrical armored heating elements on the bottom plate. 2x1050 W magnetrons for microwaves. Front air inlet and back outlet for efficient cooling ventilation. Removable top front panel and dismountable top cooking plate for better cleanability. 8 preloaded programs (editable): P1 = 70 sec. (12 sec. MW) P2 = 80 sec. (8 sec. MW) P3 = 60 sec. (20 sec. MW) P4 = 75 sec. (25 sec. MW) P5 = 85 sec. (25 sec. MW) P6 = 85 sec. (18 sec. MW) P7 = 30 sec. (25 sec. MW) P8 = 12 sec. (no MW) With Top temperature = 249° C and bottom temperature = 230° C

APPROVAL:

Main Features

- It combines 3 cooking technologies: contact, infrared radiation and microwaves to provide perfectly cooked food, heated to the core.
- Self adjusting ribbed upper plate to heat food adapting to its thickness.
- The Energy Saving Mode automatically switches to stand-by after an amount of time settled by the operator (from 1 to 60 minutes).
- Delivered with USB port and wi-fi connection to optimize workflows allowing local and remote inteaction (temperatures, countdowns, warnings).
- Electronic control with digital 4.3" LED display with adjustable brightness.
- Countdown display and buzzer with adjustable volume at the end of the cycle.
- 8 programs selectable on the display.
  The 8 programs can be adjusted by the user. The programmable parameters are:
  -top plate temperature
  -bottom plate temperature
  -total duration of e
- Automatic mechanical lid holding and opening system controlled.
- Ergonomic handle for easy movement of the lid.
- Compliant with Regulation (EC) No 1935/2004 and its amendments, Regulation (EC) No 2023/2006 and its amendments.
- Non-stick pressed tray to be used during all cooking cycles for maximum cleanability, meeting food contact requirements.

Construction

- Aluminum ribbed top contact plate (215 x 215 mm) treated with a special non-stick coating.
- Smooth 4 mm thick quartz glass bottom cooking surface (250 x 250 mm).
- 2 temperature probes for an independent control of the top and bottom plate temperature.
- Automatic lifting of the lid at the end of the cooking cycle via mechanical spring.
- Lid covers, handle and side panels in high-grade reinforced composite material.
- 800W heating element on the top plate.
- IPx4 water protection.
- 800W electrical armored heating element on the bottom plate.
- 2 x 1050W magnetrons for microwave.
- Front air inlet and back outlet for efficient cooling ventilation allows easy air filters removal and side by side installation.
- Independent temperature setting of the top and bottom plates from 50 to 250 °C.

User Interface & Data Management

- Connectivity ready for real time access to connected appliances from remote and data monitoring (requires optional accessory – contact the Company for more details).

Included Accessories

• 1 of Glass saver for SpeeDelight	PNC 653527
• 1 of Cleaning brush for SpeeDelight	PNC 653623
• 1 of Spatula for SpeeDelight	PNC 653625
• 1 of 4 rubber feet - Height = 26 mm for SpeeDelight	PNC 653792
• 1 of SpeeDelight spacer stop kit for rear ventilation	PNC 653800
• 1 of Pressed non-stick tray	PNC 653802
• 1 of Brush with nylon bristles	PNC 653803
• 1 of Brush with brass bristles	PNC 653804

Optional Accessories

• Glass saver for SpeeDelight	PNC 653527	❑
• Cleaning brush for SpeeDelight	PNC 653623	❑
• Spatula for SpeeDelight	PNC 653625	❑
• Removable ribbed teflon plate for SpeeDelight	PNC 653787	❑
• 4 stainless steel feet - Height = 76 mm for SpeeDelight	PNC 653791	❑
• 4 rubber feet - Height = 40 mm for SpeeDelight	PNC 653793	❑
• SpeeDelight spacer stop kit for rear ventilation	PNC 653800	❑
• Pressed non-stick tray	PNC 653802	❑
• Brush with nylon bristles	PNC 653803	❑
• Brush with brass bristles	PNC 653804	❑

Recommended Detergents

• *NOT TRANSLATED*	PNC 0S2292	❑
• S02 Degreaser. A highly concentrated detergent specifically for cleaning and removing grease from appliances and surfaces. Active up to a maximum of 50°C Complete with spray bottle. Pack of 6x750ml bottles	PNC 0S2882	❑

The company reserves the right to make modifications to the products without prior notice. All information correct at time of printing.

Plug In
SpeeDelight with flexible plate, ribbed removable teflon plate_UK Plug

Front

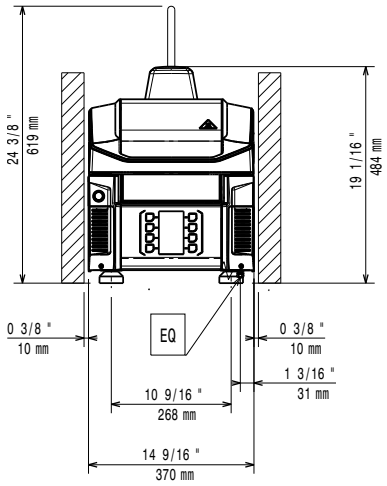

Side

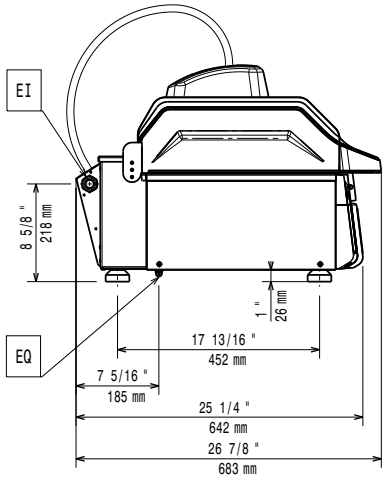

EI = Electrical inlet (power)
EO = Electrical Outlet

Top

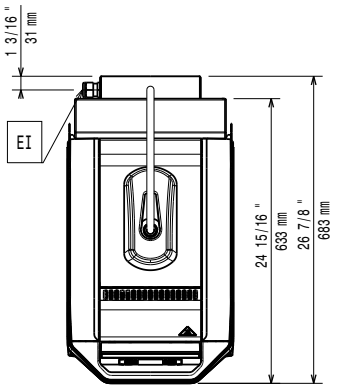

Electric

Supply voltage:	220-230 V/1 ph/50 Hz
Rated amps:	22 A
Total Watts:	5 kW

Installation:

Clearance: 190mm from rear vertical panel

Key Information:

External dimensions, Width:	370 mm
External dimensions, Depth:	683 mm
External dimensions, Height:	619 mm
Net weight:	47 kg
Shipping weight:	58.7 kg
Shipping height:	710 mm
Shipping width:	450 mm
Shipping depth:	760 mm
Shipping volume:	0.24 m³

The company reserves the right to make modifications to the products without prior notice. All information correct at time of printing.

2026.09.17